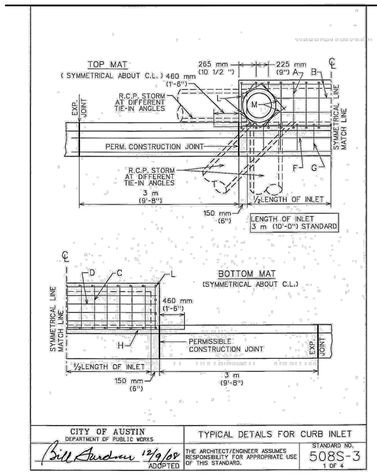

CITY OF AUSTIN DEPARTMENT OF PUBLIC WORKS	TYPICAL DETAILS FOR CURB INLET	
Bill Gardner 12/9/08 ADOPTED	THE ARCHITECT/ENGINEER ASSUMES RESPONSIBILITY FOR APPROPRIATE USE OF THIS STANDARD.	STANDARD NO. 508S-3 1 OF 4

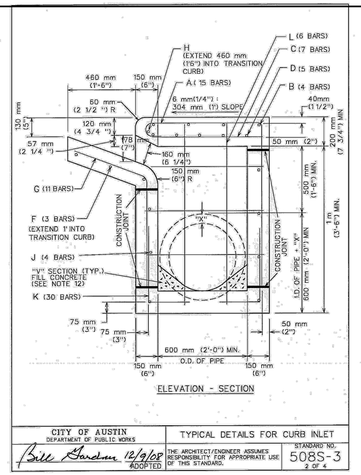

CITY OF AUSTIN DEPARTMENT OF PUBLIC WORKS	TYPICAL DETAILS FOR CURB INLET	
Bill Gardner 12/9/08 ADOPTED	THE ARCHITECT/ENGINEER ASSUMES RESPONSIBILITY FOR APPROPRIATE USE OF THIS STANDARD.	STANDARD NO. 508S-3 2 OF 4

TABLE OF QUANTITIES
FOR 18" OUTLET PIPE
REINFORCING STEEL QUANTITIES

BARS	SIZE	SPACING	NUMBER	LENGTH	WEIGHT
A	4	230mm (9"))+	15	2 m (7'-0")	73
B	4	250 mm (10")	4	3.25 m (10'-8")	29
C	4	460 mm (18")	7	760 mm (2'-6")	12
D	6	150 mm (6")	5	3.25 m (10'-8")	80
E	4	300 mm (12")	6	760 mm (2'-6")	10
F	4	250 mm (10")	3	4 m (13'-0")	35
G	4	300 mm (12")	11	1.25 m (4'-3")	31
H	6	-	1	4.25 m (14'-0")	20
J	4	300 mm (12")	7	3.25 m (10'-8")	50
K	4	230 mm (9")+	30	800 mm (2'-7 1/2")	52
L	4	300 mm (12")+	6	1.3 m (4'-4")	17
M	4	-	4	500 mm (1'-8") AVG	4
TOTAL STEEL, LB.					413
TOTAL CONCRETE, C.Y.					4.06

+ EXCEPT AS SHOWN ON PLAN

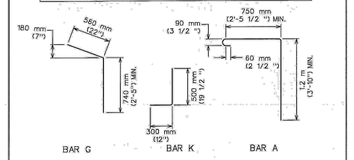

CITY OF AUSTIN DEPARTMENT OF PUBLIC WORKS	TYPICAL DETAILS FOR CURB INLET	
Bill Gardner 12/9/08 ADOPTED	THE ARCHITECT/ENGINEER ASSUMES RESPONSIBILITY FOR APPROPRIATE USE OF THIS STANDARD.	STANDARD NO. 508S-3 3 OF 4

NOTES:
1. ALL CONCRETE SHALL BE CLASS "A"
2. ALL REINFORCING STEEL SHALL BE GRADE 60
3. DIMENSIONS RELATING TO REINFORCING STEEL ARE TO CENTERS OF BARS.
4. VERTICAL STEEL MAY BE SPLICED (380 mm or 15" MIN. LAP) IN THE LOWER ONE-HALF OF ALL INLET WALLS.5. IN AREAS OF CONFLICT BETWEEN REINFORCING STEEL, PIPES AND MANHOLE FRAME, THE REINFORCEMENT SHALL BE BENT OR ADJUSTED TO CLEAR AS DIRECTED BY THE ENGINEER.
6. QUANTITIES SHOWN HEREON ARE FOR THE CONTRACTOR'S INFORMATION ONLY. PAYMENT WILL BE MADE FOR EACH INLET OF THE TYPE SPECIFIED, COMPLETE IN PLACE INCLUDING MANHOLE FRAME AND COVER.
7. CHAMFER ALL EXPOSED EDGES 20 mm (3/4 ").
8. MANHOLE FRAME AND COVER SHALL BE IN ACCORDANCE WITH CITY OF AUSTIN STANDARD 503S-1.
9. THE CONTRACTOR MAY PROPOSE ALTERNATE PROCEDURES FOR THE CONSTRUCTION OF INLETS, INCLUDING PRECAST UNITS. PLANS FOR SUCH PROPOSED ALTERNATES SHALL BE SUBMITTED TO THE ENGINEER FOR REVIEW AND APPROVAL BEFORE CONSTRUCTION.
10. ALL INLET WALLS SHALL BE FORMED EXCEPT WHERE THE NATURE OF THE SURROUNDING MATERIAL IS SUCH THAT IT CAN BE TRIMMED TO A SMOOTH VERTICAL FACE. WHEN INLET WALLS ARE PLACED TO NEAT EXCAVATION LINES THE WALL THICKNESS SHALL NOT EXCEED 10 INCHES.
11. PAYMENT FOR INLET AT THE CONTRACT PRICE SHALL INCLUDE THE TRANSITION CURB.
12. INVERT OF INLET SHALL BE SLOPED 1/20 WITH FILL CONCRETE, SHAPED AS "V" SECTION
13. NO SPLICING OF REINFORCING STEEL SHALL BE PERMITTED UNLESS OTHERWISE NOTED ON THE PLANS OR PERMITTED IN WRITING BY THE ENGINEER.

REFERENCES:
FOR EXPANSION JOINT DOWEL AND DOWEL LOCATION DETAILS SEE STD. 430S-3, "CURB EXPANSION JOINT DOWEL DETAIL".
FOR 18" MANHOLE FRAME AND COVER DETAILS SEE STD. 503S-1, "18" COVER AND FRAME".

CITY OF AUSTIN DEPARTMENT OF PUBLIC WORKS	TYPICAL DETAILS FOR CURB INLET	
Bill Gardner 12/9/08 ADOPTED	THE ARCHITECT/ENGINEER ASSUMES RESPONSIBILITY FOR APPROPRIATE USE OF THIS STANDARD.	STANDARD NO. 508S-3 4 OF 4

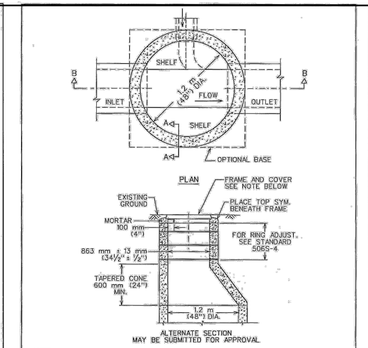

NOTE:
USE 600 mm (32") FRAME AND COVER.

MINIMUM MANHOLE DIA.	MINIMUM PIPE SIZE
1.2 m (4')	450 TO 600 mm (18 TO 24")
1.5 m (5')	750 mm TO 1.1 m (30 TO 42")
1.8 m (6')	1.2 TO 1.4 m (48 TO 54")
2.1 m (7')	1.5 TO 1.7 m (60 TO 66")

SIZE TO BE USED IS DEPENDENT ON DRAIN ANGLES.

CITY OF AUSTIN DEPARTMENT OF WATERSHED PROTECTION AND DEVELOPMENT REVIEW	PRE-CAST CONCRETE STORM DRAIN MANHOLE	
George E. Dwyer 2/14/97 ADOPTED	THE ARCHITECT/ENGINEER ASSUMES RESPONSIBILITY FOR APPROPRIATE USE OF THIS STANDARD.	STANDARD NO. 506S-3 1 OF 2

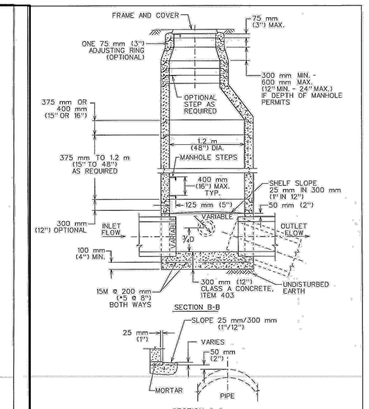

CITY OF AUSTIN DEPARTMENT OF WATERSHED PROTECTION AND DEVELOPMENT REVIEW	PRE-CAST CONCRETE STORM DRAIN MANHOLE	
George E. Dwyer 2/14/97 ADOPTED	THE ARCHITECT/ENGINEER ASSUMES RESPONSIBILITY FOR APPROPRIATE USE OF THIS STANDARD.	STANDARD NO. 506S-3 2 OF 2

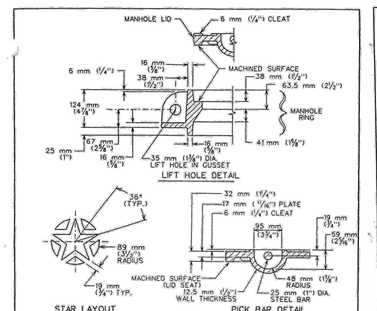

NOTES:
1. ALL CORNERS AND EDGES SHALL HAVE A 1.5 mm (1/16") MINIMUM RADIUS.
2. LIDS SHALL BE CAST WITH TWO 25 mm (1") DIA. STEEL PICK BARS.
3. LID WEIGHTS SHALL BE 935 N (210 LBS.) FOR CAST IRON OR 779 N (175 LBS.) FOR DUCTILE IRON. WEIGHT SHALL BE CAST ON BOTH TOP AND BOTTOM OF LID.
4. MANUFACTURER SHALL PROVIDE INDEPENDENT TESTING LABORATORY REPORT ON 25,000 POUND PROOF LOAD TEST CONDUCTED ACCORDING TO AASHTO M-306.
5. FILLETS SHALL BE 6 mm (1/4") RADIUS UNLESS OTHERWISE SPECIFIED.
6. MANUFACTURER SHALL REMOVE EXCESS IRON AND MACHINE FINISH SEATING SURFACES TO NOTED DIMENSIONS.

CITY OF AUSTIN DEPARTMENT OF WATERSHED PROTECTION AND DEVELOPMENT REVIEW	STORM DRAIN MANHOLE RING AND 813 mm (32") COVER	
George E. Dwyer 2/14/97 ADOPTED	THE ARCHITECT/ENGINEER ASSUMES RESPONSIBILITY FOR APPROPRIATE USE OF THIS STANDARD.	STANDARD NO. 503S-4S 3 OF 3

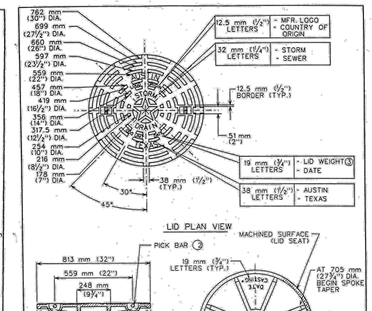

CITY OF AUSTIN DEPARTMENT OF WATERSHED PROTECTION AND DEVELOPMENT REVIEW	STORM DRAIN MANHOLE RING AND 813 mm (32") COVER	
George E. Dwyer 2/14/97 ADOPTED	THE ARCHITECT/ENGINEER ASSUMES RESPONSIBILITY FOR APPROPRIATE USE OF THIS STANDARD.	STANDARD NO. 503S-4S 1 OF 3

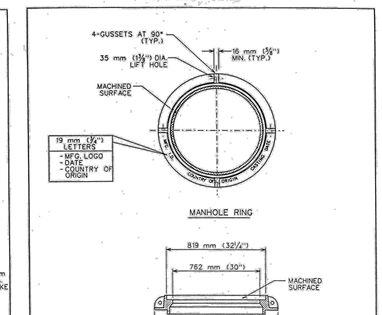

CITY OF AUSTIN DEPARTMENT OF WATERSHED PROTECTION AND DEVELOPMENT REVIEW	STORM DRAIN MANHOLE RING AND 813 mm (32") COVER	
George E. Dwyer 2/14/97 ADOPTED	THE ARCHITECT/ENGINEER ASSUMES RESPONSIBILITY FOR APPROPRIATE USE OF THIS STANDARD.	STANDARD NO. 503S-4S 2 OF 3

FOR CITY USE ONLY:

SITE PLAN APPROVAL Sheet 15 of 37
FILE NUMBER: SP-2019-0297C APPLICATION DATE: JULY 15, 2019
APPROVED BY COMMISSION ON: _____ UNDER SECTION 112 OF
CHAPTER 25-5 OF THE CITY OF AUSTIN CODE.
EXPIRATION DATE (25-5-81,LDC)_____ CASE MANAGER J. SILTALA
PROJECT EXPIRATION DATE (ORD.#970905-A)_____ DWPZ ____ DDZ X

Director, Development Services Department

RELEASED FOR GENERAL COMPLIANCE: _____ ZONING: PUD

Rev. 1 _____ Correction 1 _____
Rev. 2 _____ Correction 2 _____
Rev. 3 _____ Correction 3 _____

FINAL PLAT MUST BE RECORDED BY THE PROJECT EXPIRATION DATE, IF APPLICABLE. SUBSEQUENT SITE PLANS WHICH DO NOT COMPLY WITH THE CODE CURRENT AT THE TIME OF FILING, AND ALL REQUIRED BUILDING PERMITS AND/OR A NOTICE OF CONSTRUCTION (IF A BUILDING PERMIT IS NOT REQUIRED), MUST ALSO BE APPROVED PRIOR TO THE PROJECT EXPIRATION DATE.

DATE	NO.	REVISION	APPROVAL

garza EMC
7708 Rialto Blvd., Suite 125
Austin, Texas 78735
Tel. (512) 298-2264 Fax (512) 298-2592
TBPE Firm # F-8324
Garza EMC, LLC © Copyright 2020

JONAH D. MANKOVSKY 110095 LICENSED STATE OF TEXAS 7/2/2021

GRADING & DRAINAGE DETAILS

CITY OF AUSTIN APPROVED Date 10/21/2021

218 SOUTH LAMAR
218 SOUTH LAMAR, AUSTIN, TEXAS 78704

PFLUGER WR & MC & PFLUGER SPOUSAL

DRAWN BY: MB/RM
DESIGNED BY: JDM
QA / QC:
PROJECT NO.: 113586-00002

SHEET 15 OF 37

\\004-fs-01\teamprojects\113586-00002\Civil\00-CAD\113586-00002-GRAD-DTL.dwg modified by jmankovsky on Jul 7, 20 2:36 PM

SP-2019-0297C